FILTRATION & WATER SEPARATION
DEPENDABLE BY DESIGN

PRO PURE

SULLIVAN PALATEK

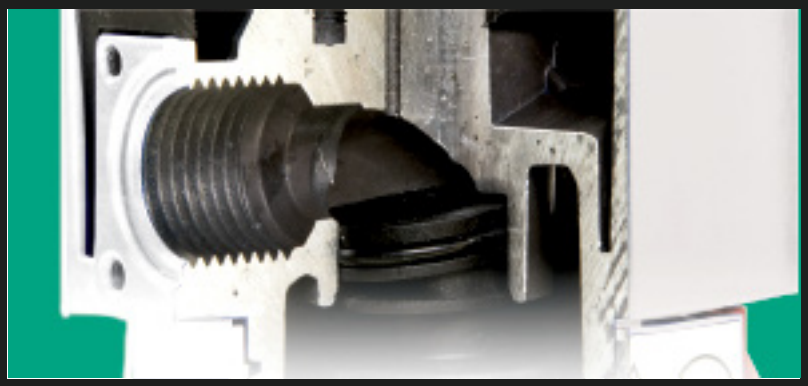

Performance

ProPure separators have superior performance and retention rates, even at partial flows, as low as 30% and as high as 150%.

Energy Efficiency

The water separator insert design was engineered specifically to provide ultra-low differential pressure throughout the entire range in combination with the curved inlet.

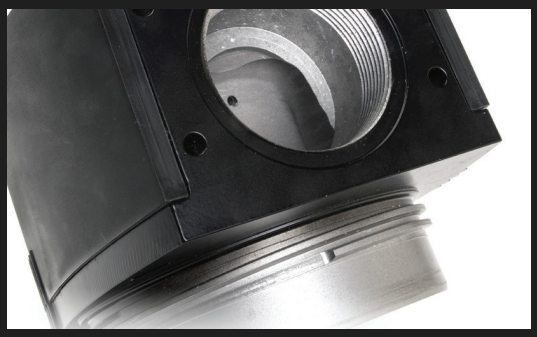

Housing Quality

A flow optimized, anodized, extruded aluminum housing with double-threaded head guarantees filter reliability and longevity.

Connection Size

Large connection sizes to flow ratio makes it easy to fit the separator to your compressor without oversizing.

Space Savings

Easily combine separators and filters together using our modular design feature that can be installed without any additional fittings or pipe.

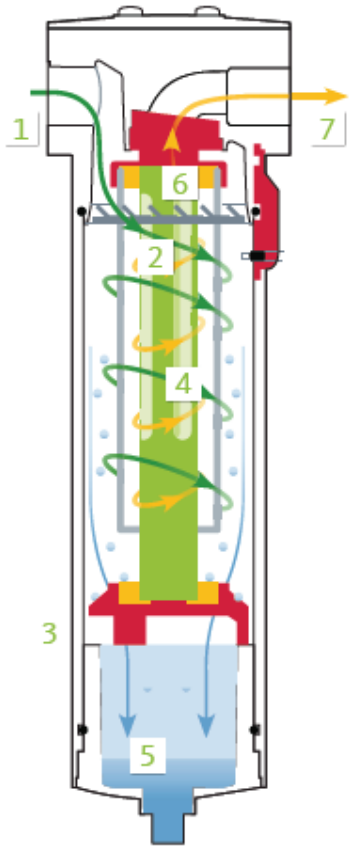

ProPure SPTWS

1. The compressed air flows into the inlet, which has been designed to work with many different types of connections.
2. A special internal turbine insert makes the compressed air rotate with high velocity, directed outward, forcing the condensate into the separator wall where it flows downward.
3. ProPure water separator filter housings are made of salt water resistant aluminum and, in addition, are fully anodized and their outside is powder coated, to avoid corrosion.
4. The innovative rectifier leads the separated compressed air to the outlet and keeps flow losses to a minimum.
5. A large area void prevents the entrainment of condensate. More than 60% of condensate will accumulate, and is reliably drained with either a float drain or SPZL Drain.
6. A rising pipe prevents particle transfer to the upward flowing, rotational compressed air stream that has already been treated.
7. The fully treated compressed air that is now free of fluids and condensate flows downstream to other inline components or the point-of-use.

ProPure Threaded Water Separators

with float drain or SPZL Drain and connection kit

- Removal of large quantities of condensate
- Used downstream of aftercoolers
- CRN approved
- Max. operating pressure: 232 psig
- Max. operating temperature: 140 °F

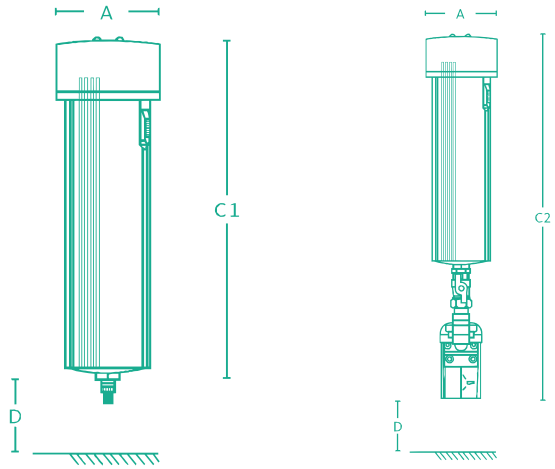

ELEMENT GRADE	ELEMENT TYPE	⚠ PRESSURE (psid)	REMOVAL RATE
Grade W	Water Separator	.87	99%

ProPure	SPTWS 25	SPTWS 30	SPTWS 50	SPTWS 100	SPTWS 125	SPTWS 160	SPTWS 250	SPTWS 450	SPTWS 500	SPTWS 600	SPTWS 1000	SPTWS 1500
Pipe Size (NPT)	3/8”	1/2”	1/2”	3/4”	1”	1”	1 1/2”	1 1/2”	2”	2 1/2”	2 1/2”	3”
Flow Rate (scfm)	25	30	50	100	125	160	250	450	500	600	1000	1500

Dimension Data

A (inches)	2.95	2.95	2.95	3.94	3.94	3.94	5.75	5.75	5.75	5.75	10.24	10.24
C1 (inches)	7.09	7.09	8.27	11.02	11.02	13.78	-	-	-	-	-	-
C2 (inches)	15.55	15.55	16.73	19.49	19.49	22.24	22.83	26.89	26.89	30.71	34.88	39.76
D (inches)	5.91	5.91	5.91	5.91	5.91	5.91	6.30	6.30	6.30	6.30	7.87	7.87
Weight (lbs)	1.65	1.65	1.87	4.18	4.18	4.63	9.04	10.61	11.24	13.45	43.87	57.10

Correction Factor

Operating Pressure (psig)	20	40	60	80	90	100	110	120	130	140	160	180	200	230
Correction Factor	.30	.48	.65	.82	.91	1.00	1.09	1.17	1.26	1.35	1.52	1.70	1.87	2.13

ProPure Flanged Water Separators

with SPZL Drain and connection kit

- Removal of large quantities of condensate
- Used downstream of aftercoolers
- SPZL Drain as standard
- Designed according to ASME Sec. VIII, Div. 1
- UM stamp standard and CRN optional
- Max. operating pressure: 232 psig
- Max. operating temperature: 140 °F

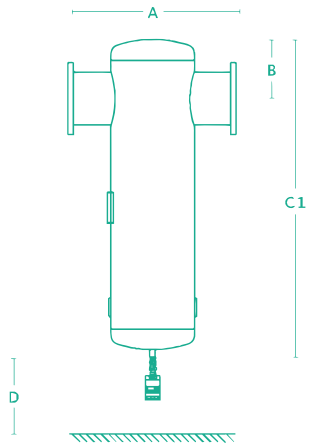

ELEMENT GRADE	ELEMENT TYPE	⚠ PRESSURE (psid)	REMOVAL RATE
Grade W	Water Separator	.87	99%

ProPure	SPFWS 1900	SPFWS 2800	SPFWS 3800	SPFWS 6500	SPFWS 7500	SPFWS 9300	SPFWS 13000	SPFWS 21000
Pipe Size (ANSI)	4”	4”	6”	6”	8”	8”	10”	12”
Flow Rate (scfm)	1900	2800	3800	6500	7500	9300	13000	21000

Dimension Data

A (inches)	15.75	18.75	19.10	21.13	22.81	24.80	29.53	34.25
B (inches)	6.96	7.75	7.80	9.75	12.38	11.34	13.07	14.57
C1 (inches)	34.25	37.25	50.24	52.63	64.50	66.93	81.50	95.28
D (inches)	12.40	18.90	18.90	18.50	18.31	17.72	17.72	16.93
Weight (lbs)	150	230	294	350	500	562	653	741

Correction Factor

Operating Pressure (psig)	20	40	60	80	90	100	110	120	130	140	160	180	200	230
Correction Factor	.30	.48	.65	.82	.91	1.00	1.09	1.17	1.26	1.35	1.52	1.70	1.87	2.13

Oil-Free Air

The pre-dried, laboratory grade activated carbon used in ProPure SPTF begins adsorbing oil immediately upon start-up with no wait time.

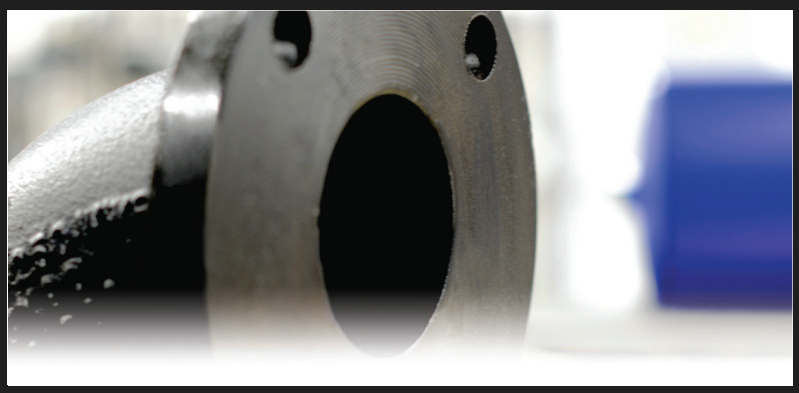

Flow Optimized

The unique curved inlet design provides the lowest possible differential pressure to ensure maximum energy efficiency across the entire range.

Maximum Reliability

ProPure SPTF vessels are highly optimized and engineered to factor in dynamic loads to the design to extend the lifetime of the unit, and your investment.

Comprehensive Line

With model sizes for applications from 80 to 2,800 scfm and up to 150 psig, our product line is comprehensive and highly competitive.

Maintenance

Engineered for ease of use with top and bottom access ports to make both draining and filling a simple, easy maintenance procedure.

ProPure SPTF

1. The filter housing has generously dimensioned, curved inlet and outlet connections to keep pressure drop to an absolute minimum when paired with existing pipework.

2. Compressed air flows through a bed of high-grade, tightly packed activated carbon. Due to the high degree of microporosity and small, low volume pores the activated carbon bed adsorbs compressor oil and contaminants as the compressed air comes into contact with the material.

3. The adsorption process allows for easy generation of oil-free compressed air that provides outlet oil vapor concentrations of less than 0.003 mg/m3 that is better than Class 1 according to ISO 8573- 1 (at 68 °F and 14.5 psia)

ProPure Threaded Coalescing and Particulate Filters

with float drain or SPZL Drain and with or without differential pressure gauge and eco series elements

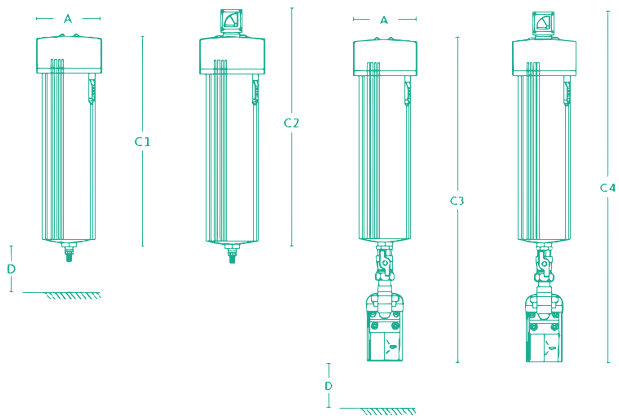

- Advanced ProPure eco series elements
- Validated in accordance with ISO 12500-1 and 3
- CRN approved
- Filter for natural gas (CNG) on request
- Max. operating pressure: 232 psig
- Max. operating temperature: 140 °F

ProPure	SPTF 25	SPTF 30	SPTF 50	SPTF 80	SPTF 100	SPTF 125	SPTF 160	SPTF 200	SPTF 250
Pipe Size (NPT)	⅜"	½"	½"	½"	¾"	1"	1"	1"	1 ½"
Flow Rate (scfm)	25	30	50	80	100	125	160	200	250

Dimension Data

A (inches)	2.95	2.95	2.95	2.95	3.94	3.94	3.94	3.94	5.75
C1 (inches)	7.09	7.09	8.27	10.43	11.02	11.02	13.78	15.16	14.17
C2 (inches)	9.65	9.65	10.83	12.99	13.58	13.58	16.34	17.72	16.73
C3 (inches)	15.55	15.55	16.73	18.90	19.49	19.49	22.24	23.62	22.83
C4 (inches)	18.11	18.11	19.29	21.46	22.05	22.05	24.80	26.18	25.39
D (inches)	5.91	5.91	5.91	5.91	5.91	5.91	5.91	5.91	6.30
Weight (lbs)	1.65	1.65	1.87	2.65	3.75	4.18	4.63	4.85	9.04

ProPure	SPTF 330	SPTF 450	SPTF 500	SPTF 600	SPTF 800	SPTF 1000	SPTF 1300	SPTF 1500	SPTF 1900
Pipe Size (NPT)	1½"	1½"	2"	2"	2"	2½"	2½"	3"	3"
Flow Rate (scfm)	330	450	500	600	800	1000	1300	1500	1900

Dimension Data

A (inches)	5.75	5.75	5.75	5.75	5.75	10.24	10.24	10.24	10.24
C1 (inches)	16.46	18.43	18.43	22.24	26.89	26.42	30.51	35.24	41.14
C2 (inches)	19.02	20.99	20.99	24.80	29.45	29.98	33.07	37.80	43.70
C3 (inches)	24.92	26.89	26.89	30.71	35.35	34.88	38.98	39.76	49.61
C4 (inches)	27.48	29.45	29.45	33.27	37.91	37.44	41.54	42.32	52.17
D (inches)	6.30	6.30	6.30	6.30	6.30	7.87	7.87	7.87	7.87
Weight (lbs)	9.92	10.61	11.24	13.45	15.65	43.87	49.82	57.10	65.92

Element Grade	Element Type	Micron Rating	Oil Carryover	Dry Δ Pressure (psid)	Wet Δ Pressure (psid)
Grade C	Coarse	25 µm	5 mg/m3	.44	.73
Grade F	Fine	1 µm	.1 mg/m3	.73	1.9
Grade S	Superfine	.01µm	.01 mg/m3	.87	1.7

Correction Factors

Operating Pressure (psig)	20	40	60	80	90	100	110	120	130	140	160	180	200	230
Correction Factor	.30	.48	.65	.82	.91	1.00	1.09	1.17	1.26	1.35	1.52	1.70	1.87	2.13

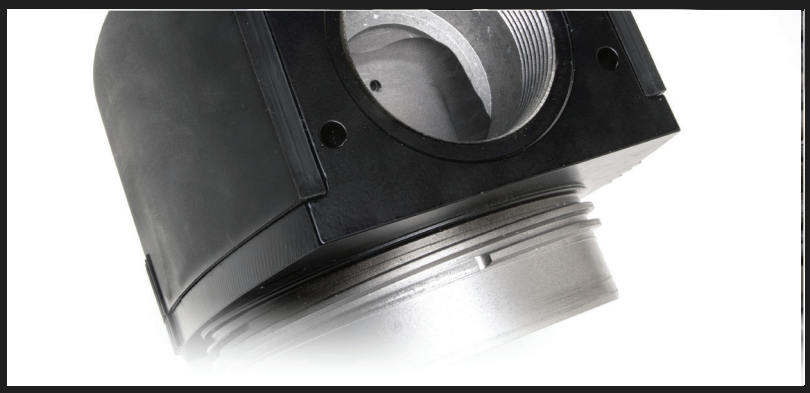

Housing Quality

A flow optimized, anodized, extruded aluminum housing with double-threaded head guarantees filter reliability and longevity.

Efficient Element

The most advanced borosilicate glass fiber and pleated design for ultra-low differential pressure and highest performance.

Range and Options

With one of the widest product ranges coupled with a host of available options, we have a solution to fit every application perfectly.

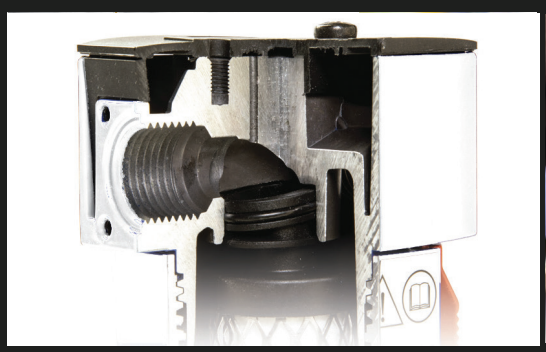

Maintenance

Every design detail was taken into consideration down to the simple, push-fit filter element without tie-rods to further reduce maintenance time.

Space Savings

ProPure filters offer a modular design feature where your perfect filtration package can be installed without any additional fittings or pipe.

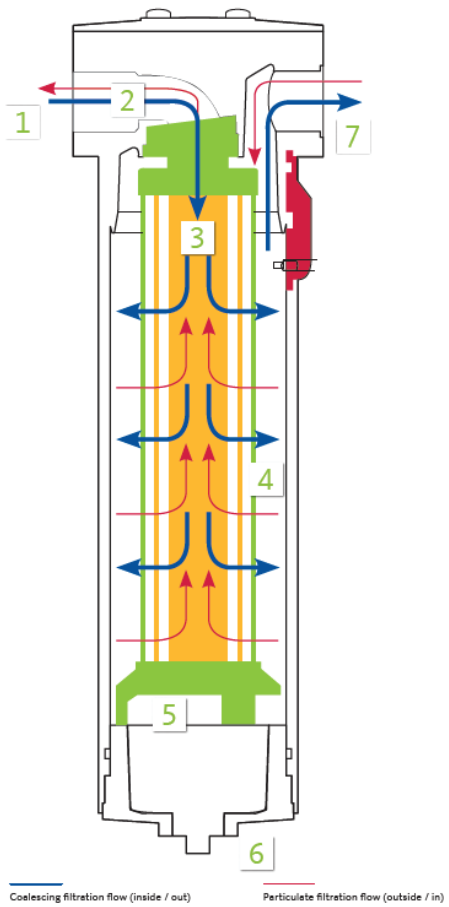

1. The compressed air flows into the inlet, which has been designed to work with many different types of connections.
2. The curved inlet provides up to 75% less flow resistance, which translates into significant energy savings.
3. The untreated compressed air passes through a high bed depth filter that retains the maximum amount of particles. The exterior of the soft pleat medium is an open cell synthetic support mesh that provides rigidity without sacrificing surface area.
4. The compressed air has now passed all the way through the filter medium and is considered as treated.
5. A large area at the base of the housing creates a generous void to prevent the entrainment of already separated condensate.
6. Condensate is drained either by a float drain or zero air loss SPZL Drain. A hexagonal profile at the base of the filter allows it to be easily opened for element changes and maintenance
7. The fully treated compressed air that is now free of fluids, solids, and other pollutants flows downstream to other inline components or the point-of-use.

TECHNICAL DETAILS

ProPure Flange Coalescing and Particulate Filters

with SPZL Drain and connection kit with differential pressure gauge pressure gauge and eco series elements

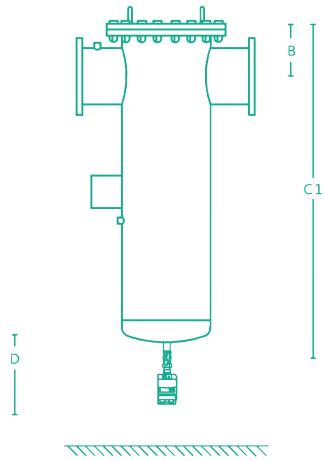

- Advanced ProPure eco series elements
- Validated in accordance with ISO 12500
- Designed according to ASME Sec. VIII, Div. 1
- UM stamp standard and CRN optional
- Max. operating pressure: 232 psig
- Max. operating temperature: 140 °F

ProPure	SPFF 1900	SPFF 2800	SPFF 3800	SPFF 6500	SPFF 7500	SPFF 9300	SPFF 13000	SPFF 21000
Pipe Size (ANSI)	4”	4”	6”	6”	8”	8”	10”	12”
Flow Rate (scfm)	1900	2800	3800	6500	7500	9300	13000	21000

Dimension Data

A (inches)	21.25	21.25	23.50	23.75	28.00	30.31	34.65	38.98
B (inches)	6.88	7.13	8.00	8.25	9.50	9.75	9.88	10.87
C1 (inches)	46.50	47.38	46.88	50.38	53.00	56.34	60.18	64.26
D (inches)	13.00	18.00	18.00	18.00	18.00	18.00	18.00	18.00
Weight (lbs)	195	266	283	328	534	623	727	825

Element Grade	Element Type	Micron Rating	Oil Carryover	Oil Vapor	Dry Δ Pressure (psid)	Wet Δ Pressure (psid)	Approvals
A (inches)	Coarse	25 µm	5 mg/m³	-	.44	.73	ASME Coded Vessel with UM Stamp as standard (CRN Optional)
B (inches)	Fine	1 µm	.1 mg/m³	-	.73	1.9	
C1 (inches)	Super Fine	.01 µm	.01 mg/m³	-	.87	1.7	
D (inches)	Activated Carbon	.01 µm	-	.003 mg/m³	1.45	-	

Correction Factors

Operating Pressure (psig)	20	40	60	80	90	100	110	120	130	140	160	180	200
Correction Factor	.30	.48	.65	.82	.91	1.00	1.09	1.17	1.26	1.35	1.52	1.70	1.87

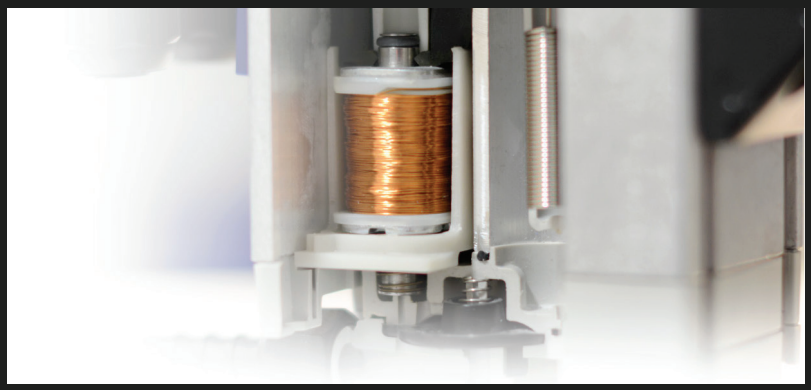

Energy Savings

Maximum energy savings is achieved from the patented operation that guarantees true zero air loss.

Reliability

An integrated sieve eliminates concerns about dirt, Y-strainers, and extra maintenance giving you the highest level of reliability.

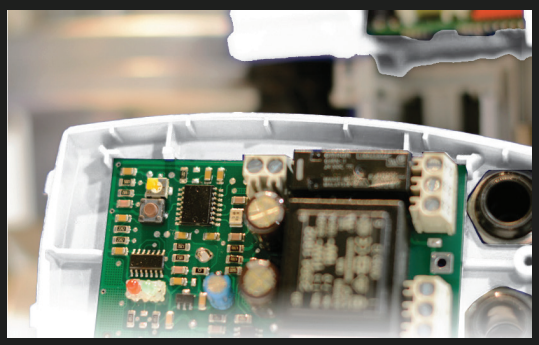

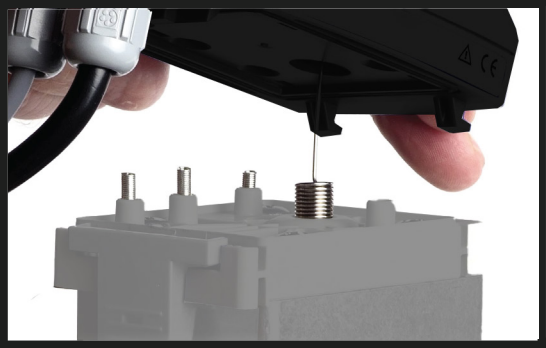

Intelligence

The electronic control board and sensor ensure intelligent operation at all times with the ability to automatically clear clogs and debris.

Maintenance

Maintenance time and costs are kept to an absolute minimum with a quick and easy procedure consisting of just one part.

Trustworthy

You can rely on the global leader in condensate technology trusted by more equipment manufacturers than any other brand.

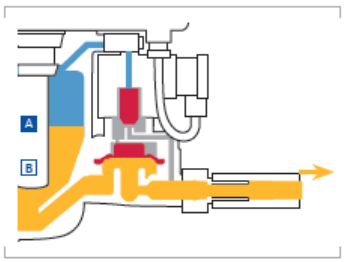

Condensate outlet

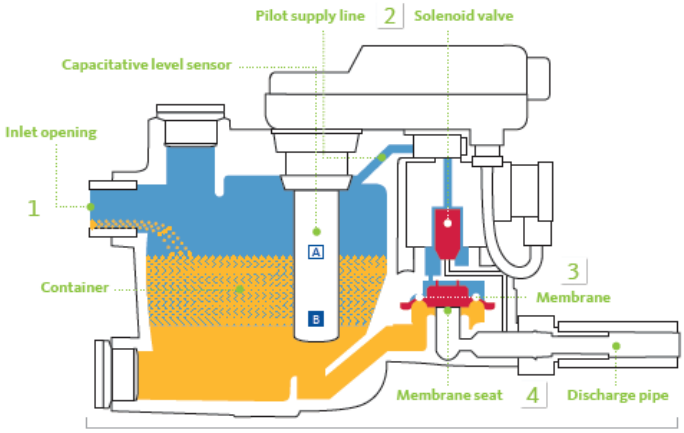

Condensate inlet

1. The condensate trickles through the inlet opening and collects in the container.
2. Initially, the valve is closed as, via the pilot supply line and the solenoid valve, pressure differential above the membrane is affected. The larger surface area above the membrane results in a high closing force. The membrane seat remains closed and leak-proof.
3. When the container is filled with condensate, so that the capacitive level sensor gets a signal at the maximum point , the solenoid valve switches over and the area above the membrane is vented.
4. As a result of the decreasing pressure above the membrane, the membrane lifts off the membrane seat and the overpressure in the housing forces the condensate into the discharge pipe.

TECHNICAL DETAILS

SPZL Standard Condensate Drains

for standard pressure

- Automatic zero loss drain
- Standard Viton® diaphragm
- UL/CSA approved
- Min. / max. operating temperature: 33 °F / 140 °F
- Standard voltage:
- SPZL Drain 31-33: 95-240 VAC 50/60 Hz /100-125 VDC
- SPZL Drain 13-16: 115 VAC
- › Optional voltages:
- SPZL Drain 31-33: 18 - 72 VDC, 24 - 48 VAC
- SPZL Drain 13-16: 24 VAC/DC, 230 VAC 50/60 Hz

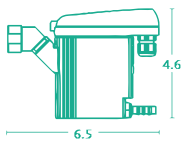

Depth: 2.6

Aluminum Housing
*without dry contact

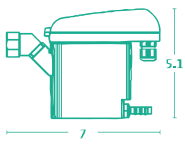

Depth: 2.9

Aluminum Housing

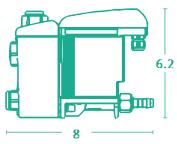

Depth: 2.9

Aluminum Housing

SPZL Drain	31	32	33	13	14
Connection Size (NPT)	1 x ½"	1 x ½"	3 x ½"	2 x ½"	3 x ¾"
Min. / Max Pressure (psig)	12 / 232	12 / 232	12 / 232	12 / 232	12 / 232
Compressor Flow Rate (scfm)	100	225	500	1300	5400
Dryer Flow Rate (scfm)	200	450	1000	2600	10800
Filter Flow Rate (scfm)	1000	2250	5000	13000	54000
Max Temperature	140 °F	140 °F	140 °F	140 °F	140 °F
Built in Sieve			✔		
Y Strainer				✔	✔
List Price	$241.00	$327.00	$577.00	$856.00	$1,159.00

****Do NOT use "31" on wet tank** "33" is best for wet tank.**
Use poly tube if at all possible. Do not use hard pipe to drain.

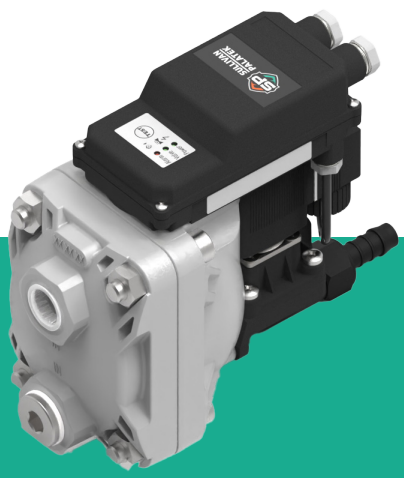

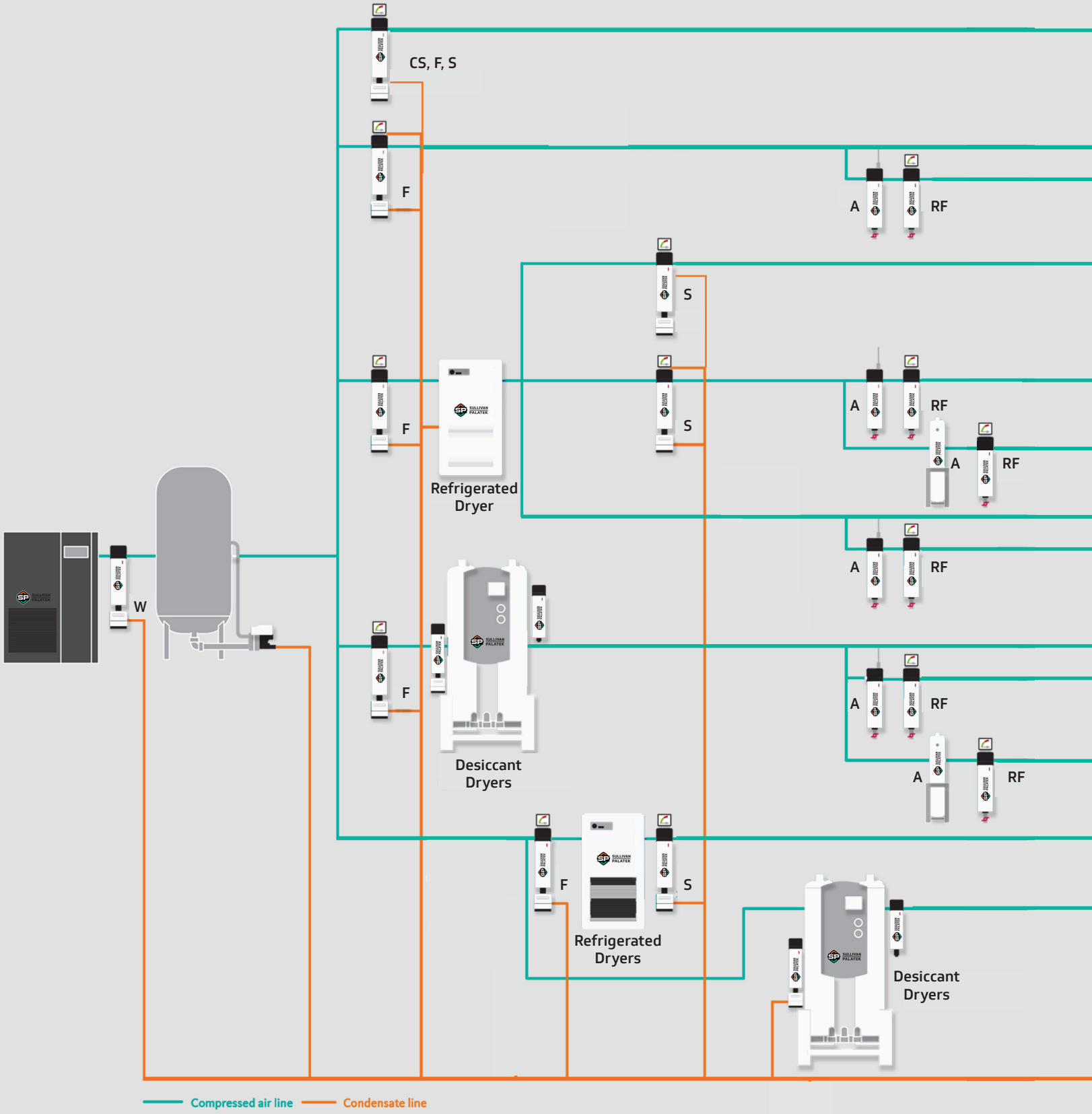
CS, F, S
F
A
RF
S
F
S
A
RF
A
RF
Refrigerated Dryer
W
F
A
RF
Desiccant Dryers
A
RF
F
S
Refrigerated Dryers
Desiccant Dryers
Compressed air line
Condensate line

Solid Particles	Pressure Dew Point	Oil/Oil Vapor
1 – 4	–	1 – 5
1 – 4	2 – 4	1-5
1	2 – 4	1
1 – 2	4	1-5
1	4	1
1	4	1
1	2 – 3	1-5
1	2 – 3	1
1	1 – 2	1
1	1 – 2	1
1	1 – 2	1
1	1 – 4	‹1
1	1 – 4	‹1

SPremiere Pure

ProPure
with manual drain
with differential pressure indicator

ProPure
coalescence filter F/A/C/S with ZL drain
with differential pressure indicator or filter management

ProPure A
activated carbon filter
Option: oil check indicator

ProPure A
activated carbon cartridge
with oil check indicator

ProPure A
activated carbon absorber

ProPure W
water separator
with ZL drain

Oil-Water Separator
oil-water separation system
for dispersed and emulsified condensates

Refrigerated Dryers
refrigeration dryer
with ZL drain

Refrigerated Dryers X
desiccant dryer
with inlet and dust filter

SPZL Drain
intelligent zero air loss
condensate drains

Air quality classes in accordance with ISO 8573-1:2010

Class	Solid particles, max. number of particles per m³			Pressure dew point	Oil content (liquid, aerosol, oil vapor)
	0.1 µm ‹ d ≤ 0.5 µm	0.5 µm ‹ d ≤ 1.0 µm	1.0 µm ‹ d ≤ 5.0 µm	°F	mg/m³
0	In accordance with the unit operator's or supplier's specifications, stricter requirements than class 1				
1	≤20,000	≤400	≤10	≤–100	≤0.01
2	≤400,000	≤6,000	≤100	≤–40	≤0.1
3	-	≤90,000	≤1,000	≤–4	≤1
4	-	-	≤10,000	≤37	≤5
5	-	-	≤100,000	≤45	›5
6	-	-	-	≤50	-

- Measured in accordance with ISO 8573-4, ref. conditions 14.5 psi [a] absolute, 68 °F, 0% RH
- Measured in accordance with ISO 8573-3
- Measured in accordance with ISO 8573-2 and ISO 8573-5, ref. conditions 14.5 psi [a] absolute, 68 °F, 0% RH

DEPENDABLE BY DESIGN

Sullivan Palatek
1201 West US Highway 20
Michigan City IN, 46360
(219) 874 - 2497
www.sullivan-palatek.com

CAGI Compressed Air & Gas Institute

SULLIVAN PALATEK

05018731-0023 R02